TECO	OUTLINE DIMENSIONS 3-PHASE INDUCTION MOTOR	FRAME NO : D112M

POLE	kW	HP	RPM
2	4.00	5.40	2920
4	4.00	5.40	1450
6	2.20	3.00	950

Totally Enclosed Fan-Cooled Type, Squirrel-Cage Rotor.

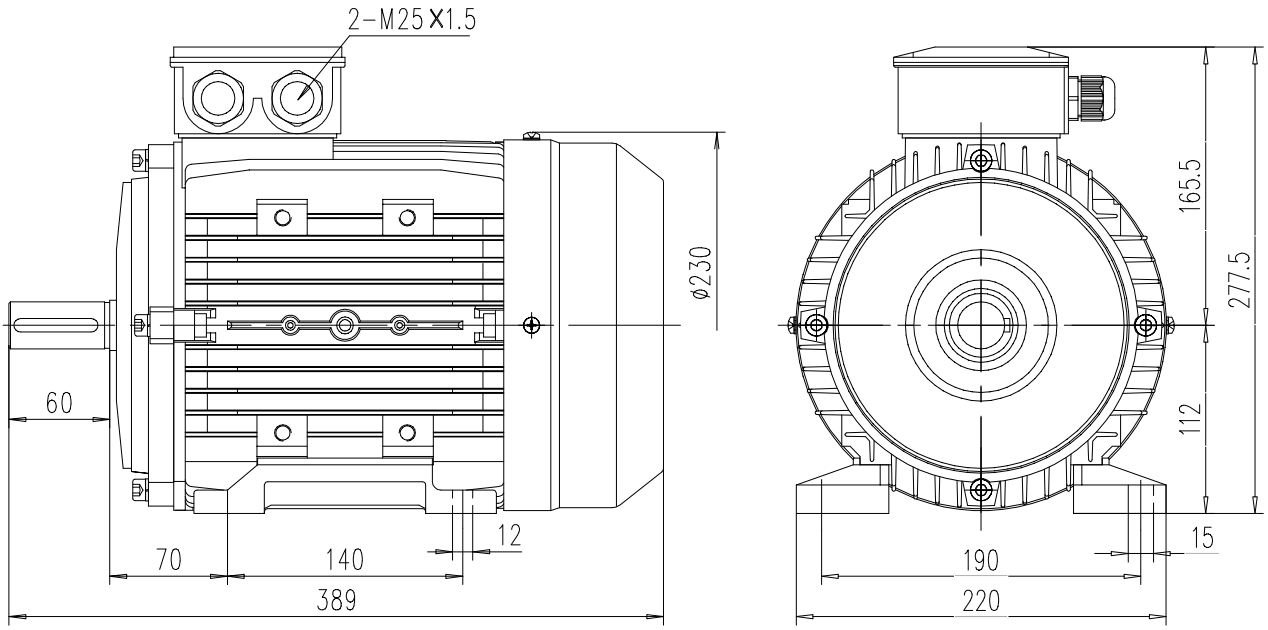

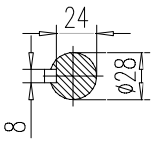

NOTES:

1. DIMENSIONS IN mm.
2. SCALE 1: 4.5.
3. FOOT MOUNTED IM1001.
4. FOR DIRECT DRIVE ONLY.
5. IP55 PROTECTION.

MAX ALLOY

DWN.	DP	16.12.24	REV : 00
CHKD.	AN	16.12.24	
APPD.	JC	16.12.24	